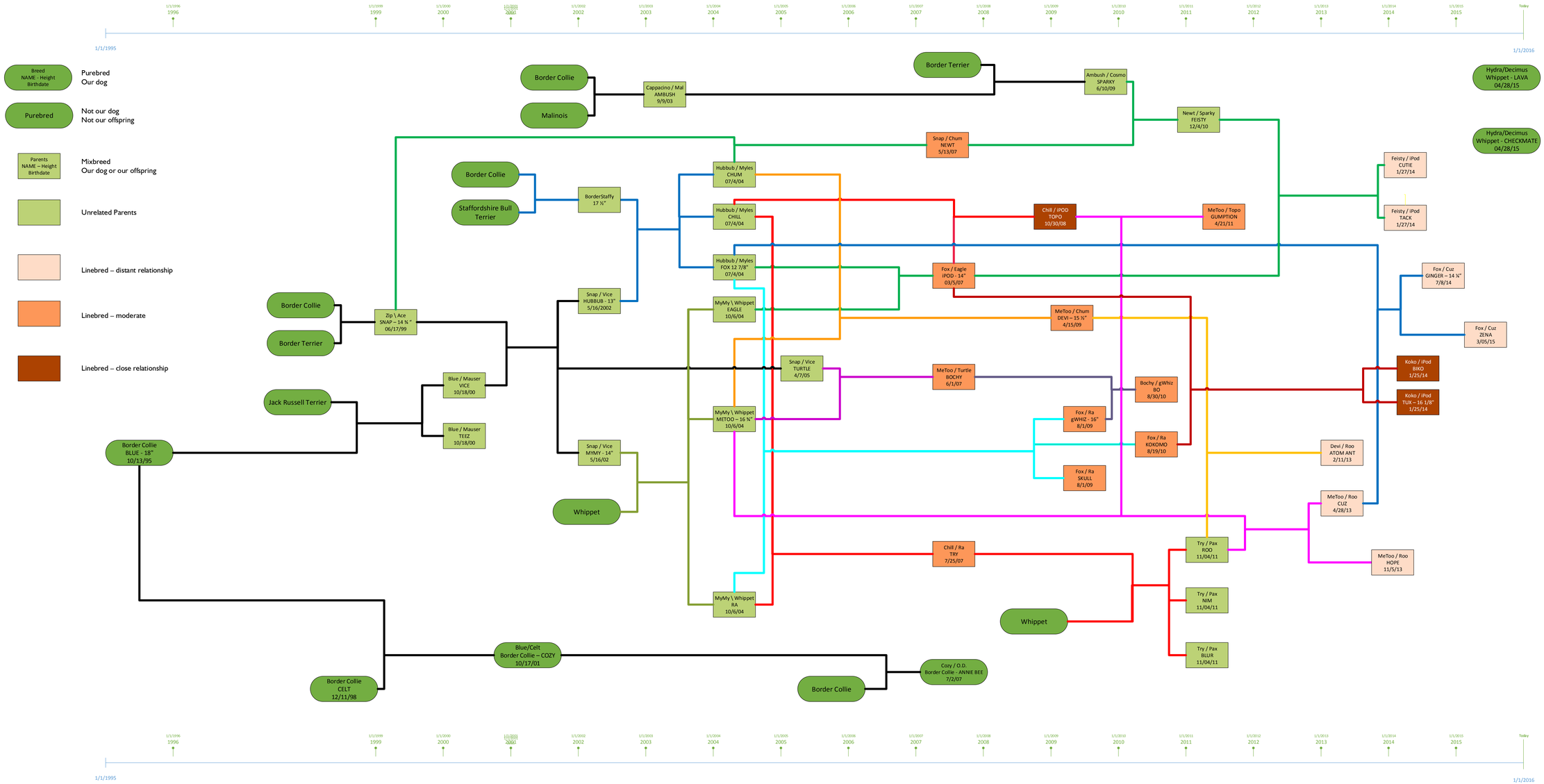
1/1/1995
1/1/1996
1996
1/1/1999
1999
1/1/2000
2000
1/1/2001
2001
1/1/2002
2002
1/1/2003
2003
1/1/2004
2004
1/1/2005
2005
1/1/2006
2006
1/1/2007
2007
1/1/2008
2008
1/1/2009
2009
1/1/2010
2010
1/1/2011
2011
1/1/2012
2012
1/1/2013
2013
1/1/2014
2014
1/1/2015
2015
Today
1/1/2016
Breed
NAME - Height
Birthdate
Purebred
Our dog
Purebred
Not our dog
Not our offspring
Parents
NAME – Height
Birthdate
Mixbreed
Our dog or our offspring
Unrelated Parents
Linebred – distant relationship
Linebred – moderate
Linebred – close relationship
Border Collie
Malinois
Cappacino / Mal
AMBUSH
9/9/03
Border Terrier
Ambush / Cosmo
SPARKY
6/10/09
Hydra/Decimus
Whippet - LAVA
04/28/15
Newt / Sparky
FEISTY
12/4/10
Hydra/Decimus
Whippet - CHECKMATE
04/28/15
Snap / Chum
NEWT
5/13/07
Feisty / iPod
CUTIE
1/27/14
Feisty / iPod
TACK
1/27/14
Border Collie
Staffordshire Bull
Terrier
BorderStaffy
17 ½"
Hubbub / Myles
CHUM
07/4/04
Hubbub / Myles
CHILL
07/4/04
Chill / iPOD
TOPO
10/30/08
MeToo / Topo
GUMPTION
4/21/11
Hubbub / Myles
FOX 12 7/8"
07/4/04
Fox / Eagle
iPOD - 14"
03/5/07
Fox / Cuz
GINGER – 14 ¼"
7/8/14
Fox / Cuz
ZENA
3/05/15
Border Collie
Zip \ Ace
SNAP – 14 ¼ "
06/17/99
Snap / Vice
HUBBUB - 13"
5/16/2002
MyMy \ Whippet
EAGLE
10/6/04
MeToo / Chum
DEVI – 15 ½"
4/15/09
Border Terrier
Snap / Vice
TURTLE
4/7/05
MeToo / Turtle
BOCHY
6/1/07
Koko / iPod
BIKO
1/25/14
Koko / iPod
TUX – 16 1/8"
1/25/14
Jack Russell Terrier
Blue / Mauser
VICE
10/18/00
Bochy / gWhiz
BO
8/30/10
MyMy \ Whippet
METOO – 16 ¼"
10/6/04
Fox / Ra
gWHIZ - 16"
8/1/09
Blue / Mauser
TEEZ
10/18/00
Fox / Ra
KOKOMO
8/19/10
Devi / Roo
ATOM ANT
2/11/13
Border Collie
BLUE - 18"
10/13/95
Snap / Vice
MYMY - 14"
5/16/02
Fox / Ra
SKULL
8/1/09
Whippet
MeToo / Roo
CUZ
4/28/13
Chill / Ra
TRY
7/25/07
Try / Pax
ROO
11/04/11
MeToo / Roo
HOPE
11/5/13
MyMy \ Whippet
RA
10/6/04
Try / Pax
NIM
11/04/11
Whippet
Blue/Celt
Border Collie – COZY
10/17/01
Try / Pax
BLUR
11/04/11
Cozy / O.D.
Border Collie - ANNIE BEE
7/2/07
Border Collie
CELT
12/11/98
Border Collie